Quality Management, Inc. (QMI)
www.qmisystems.com
651-501-2337

Welding instructions for the following part numbers:
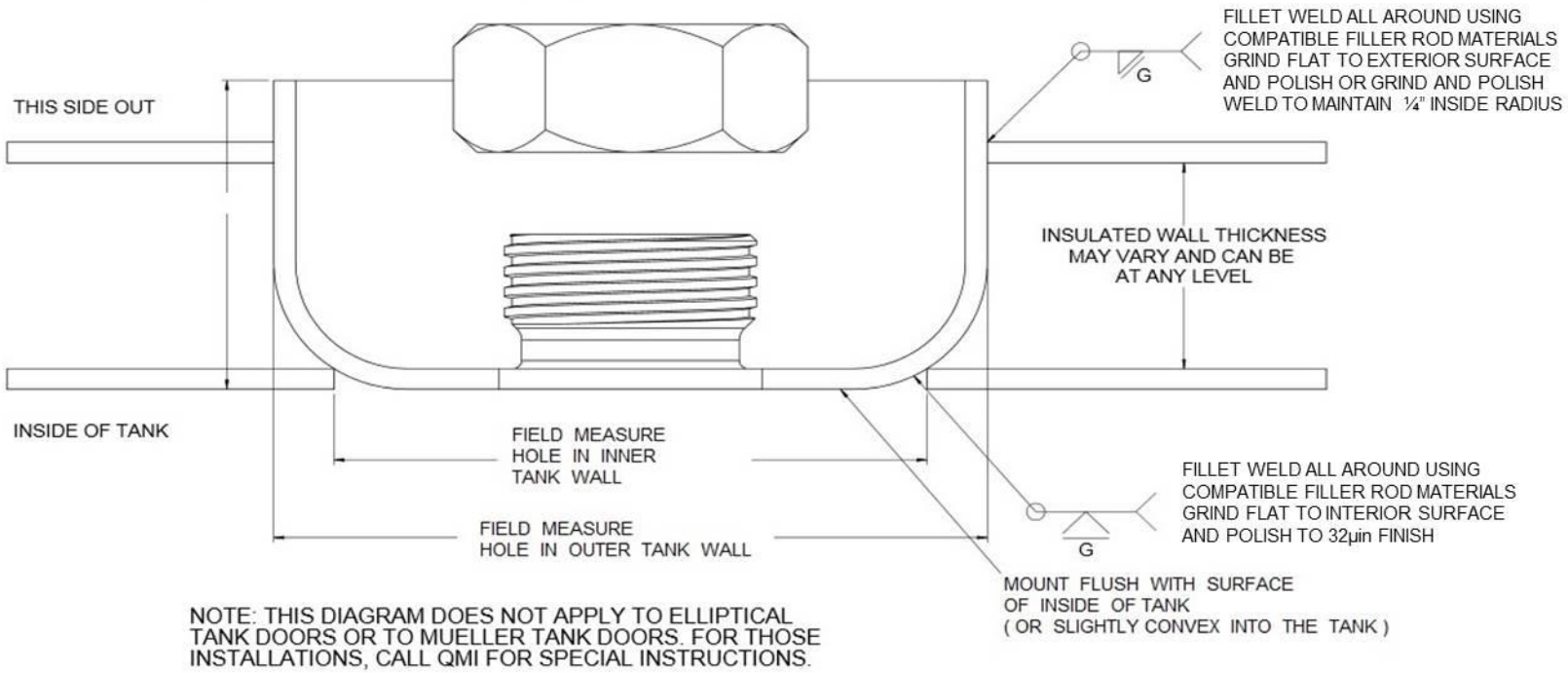
- ❒ PN 212123
- ❒ PN 212127
- ❒ PN 212133